CRYSTAL IMAGE TECHNOLOGIES

LCD-APK55

Professional and Versatile 55" LED Monitor

4K UHD

Key Benefits

- 55" LED, 3840 x 2160 native UHD resolution
- 1920 x 1080 & 1920 x 1200 resolution support
- 1.07 billion colors (10-bit) / 450 cd/m² brightness
- PIP Sub-screen & PBP Dual-screen viewing efficiency
- Display port 1.2 + HDMI 1.4 + HDMI 2.0 video input
- Video decoding capability up to 1080p (option)
- Rugged structure ensures high mobility
- IP65 front protection (NAP series)
- 1500 cd/m² sunlight readable panel available
- Professional-use durability & around-the-clock operation
- 2-year standard warranty (upgradable up to 5 years)

Applications

- Broadcasting / Advertising
- Traffic control / Command center
- Directory / Ticket kiosk
- Surveillance system
- Vehicle mount display
- Bathroom TV

The Industrial series 55" 4K UHD LED monitor supports 3840 x 2160 resolution, 4 times the resolution of FHD. True 10-bit input enables 1.07 billion colors to be presented, achieving ultimate picture quality. Improved energy efficiency and fan-less architecture provides professional-use durability and around-the-clock operation.

K55 is more than just a standalone monitor. It has a variety of embedded modules including HDMI Decoder, HDMI Extender, HDMI Quad display Extender, Multi-Monitor OSD Controller, SDI Input and Portrait Mode Kit. The embedded modules give you the ability of video remote management and transmission for multiple monitors over network.

As a versatile 4K monitor, K55 is meticulously designed to meet professional and environmental demands including Sunlight readable brightness, IP65 Front protection, Multi-touch, Anti-reflective/Vandal proof glass, DC power input, Brightness dimming and Mounting kit for Overhead tilted wall-mount, Panel-mount, VESA-mount, Universal-mount and Desktop stand.

With over 22 years' production experience, the K55 structure is well-engineered and manufactured by our own CNC facilities and team of experts to ensure its ruggedness, mobility and quality , as well as being suitable for harsh environment applications. The structure can be customized if required to facilitate monitor installation. Our knowledgeable engineers are able to provide frame customization for specific dimensions, color, metal treatment, screen printing, bezel and mounting.

Options

Video Management & Transmission over Network

- Embedded HDMI Decoder Module 1080p over IP
- Embedded HDMI Extender Module 1080p over network
- Embedded HDMI Quad Display Module 1080p over network
- Embedded HDMI Quad Display Extension Module
- Embedded Multi Monitor OSD Control Module over serial
- Embedded 3G / HD / SD-**SDI** Input Module
- Embedded Portrait Mode Module
- Embedded Brightness Dimming Module

Touchscreen & Glass Protection

- Infrared 10-point Touch
- Anti-reflective Glass
- Vandal Proof Glass

DC Power

- 24V / 48V / 125VDC (150 Watt)

Bezel & Frame Customization

- Dimension
- Color & Treatment
- Screen Printing
- Stainless Steel Bezel

Mounting

- VESA mount , 600 x 400mm (bundled)
- Universal mount (bundled)
- Overhead tilted wall-mount (option)
- Desktop stand (option)
- Wall mount (bundled)

K55 Professional and Versatile 55" LED Monitor

450 cd/m² Brightness

8mm aluminum front bezel

AP-K55

8mm aluminum front bezel
NEMA 4 / IP65 front protection

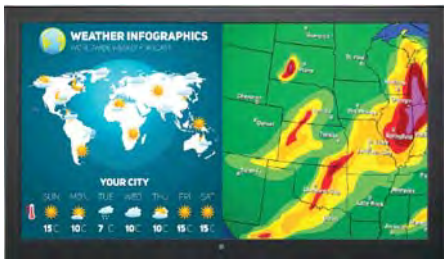

NAP-K55

Aluminum front cover

DP-K55

Universal open frame

OP-K55

MP-K55

Industrial Display Kit
- 4K 55" LED
- LCD controller
- AC power

1500 cd/m² Sunlight Readable Brightness

8mm aluminum front bezel

HAP-K55

8mm aluminum front bezel
NEMA 4 / IP65 front protection

NHAP-K55

Aluminum front cover

HDP-K55

Universal open frame

HOP-K55

K55 Professional and Versatile 55" LED Monitor

Options — Video Management & Transmission over Network

Embedded HDMI Decoder Module 1080p over IP

- Decodes RTSP, RTMP, UDP, HTTP, HLS protocols
- Supports video resolutions up to 1080p / 60Hz
- Unicast and multicast support
- Operates on standard 1000Mb Ethernet networks
- Built-in Web UI for configuration and control
- Excellent image quality with very low delay

Part no.

Embedded HDMI Decoder Module : **UV-DE100F**
Standalone HDMI Encoder : **UV-EN100F**

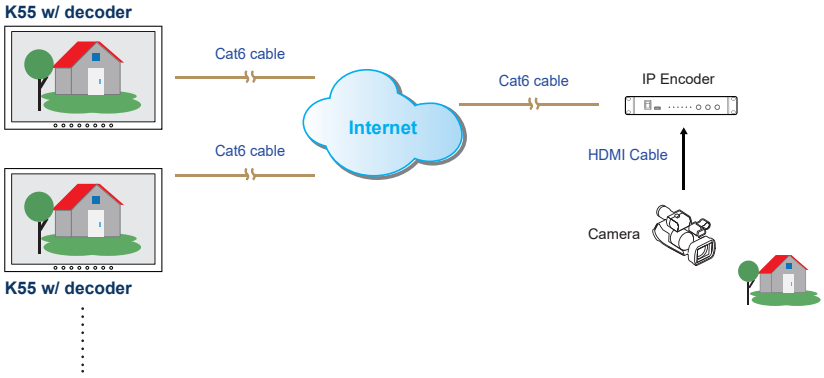

Embedded HDMI Receiver Module 1080p

- Extends the HDMI signal over a single Cat5/6 cable
- Supports video resolutions up to 1080p / 60Hz
- One to one just via Cat5/6 cable
- One to multi via network hub and Cat5/6 cable
- 100m maximum Cat5/6 cable distance
- Supports bi-directional IR communication
- High Speed HDMI 1.3 and HDCP 1.1 compliant
- No software or drivers required

Part no.

Embedded HDMI Receiver Module : **UV-R100F**
Standalone HDMI Transmitter : **UV-T100F**

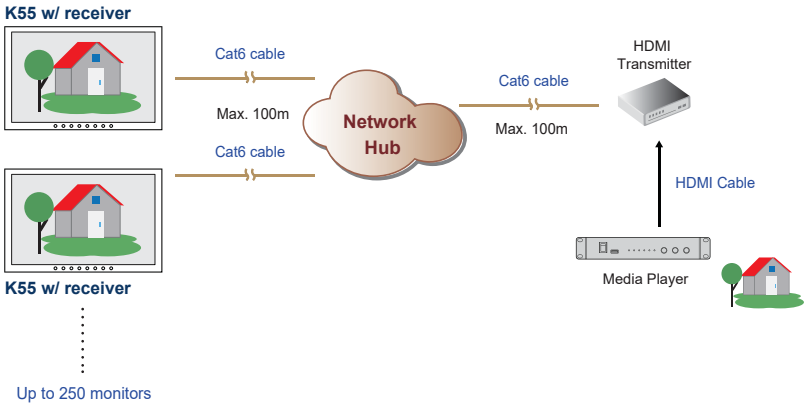

Embedded HDMI Quad Display Module 1080p

- Allows 4 x HDMI inputs to be monitored simultaneously
- Quad split, panel left and full screen monitoring modes
- High speed HDMI 1.3a and HDCP 1.2 compliant
- Supports video resolutions up to 1080p / 60Hz
- Supports Scaler Up and Down function
- Control via local front panel and IR remote

Part no.

Embedded HDMI Quad Display Module : **QD-1080**
Embedded Quad Display Extension Module : **QD-E1080**

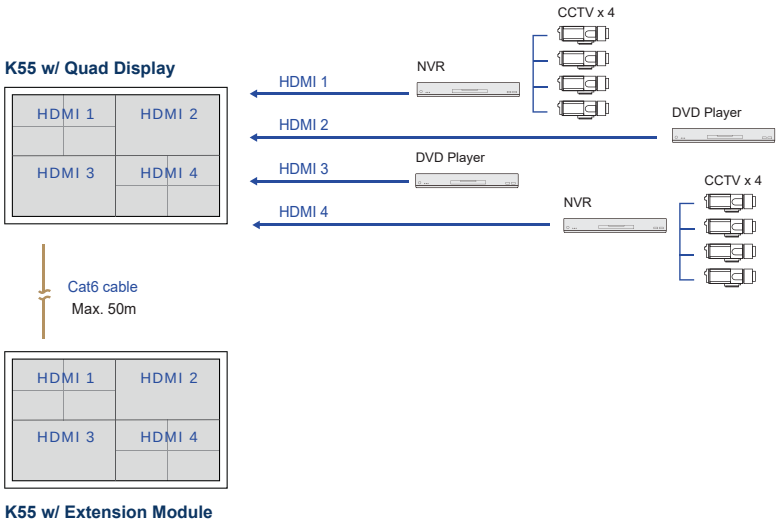

K55 Professional and Versatile 55" LED Monitor

Options — Video Management & Transmission over Network

Embedded Multi Monitor OSD Control Module over serial

- Remote control the monitor OSD via RS-232C serial interface
- Daisy chain up to 64 monitors via Cat5/6 cable
- Individual ID for individual monitor OSD settings
- Power ON or OFF monitor
- Adjust brightness & audio
- Switch video sources

Part no.

Embedded Multi Monitor OSD Control Module : **MCS**

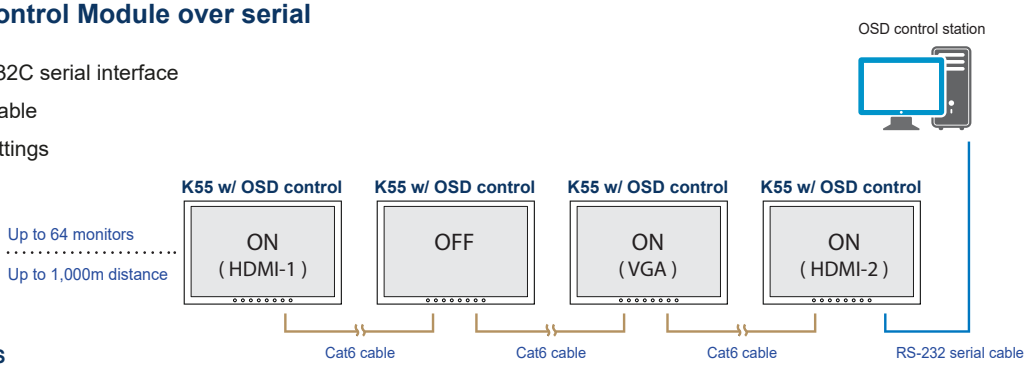

Embedded 3G / HD / SD-SDI Input Module

- Intelligent SDI monitoring with broadcast quality scopes
- Supports multi-rate 3G / HD / SD-SDI format
- Provides input to output loop-through capability
- Auto format sensing & selection

Part no.

Embedded 3G / HD / SD-SDI Input Module : **SDI**

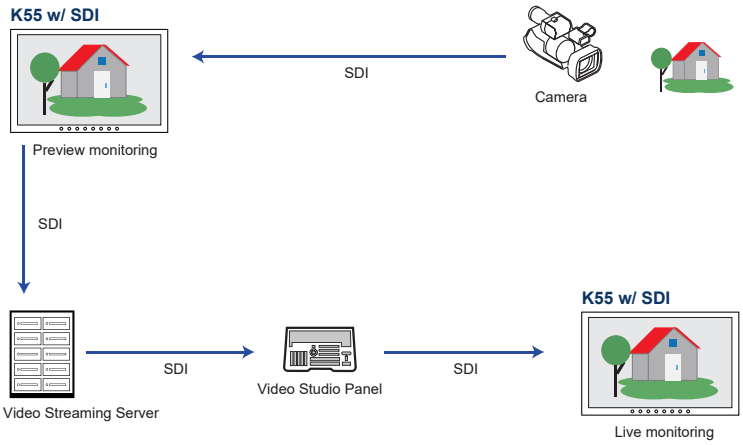

Embedded Portrait Mode Module

- Provides users with a rotation feature (0, 90, 180 & 270 orientation) without frame delay via OSD
- Allows distortion-free display of content in various orientations
- Creates new application opportunities

K55
w/ Portrait mode module

Part no.

Embedded Portrait Mode Module : **AD4.0-P**

Embedded Auto Brightness Dimming Module

- Brightness changes according to its ambient brightness
- Its brightness change causes 10% increase or decrease

Part no.

Embedded Brightness Auto Dimming Module : **DA-01**

Embedded Manual Brightness Dimming Knob

- Easy-to-use IP54 dimming knob on the front panel
- One click causes 2% brightness increase or decrease
- Brightness adjustment from 0% to 100%

Part no.

Brightness Dimming Knob : **DS-01**

K55 Professional and Versatile 55" LED Monitor

Option — Infrared 10-point Touch

	IR-10 Infrared
Technology	Infrared
Touch Point	10
Input Type	Pen, Finger, Finger of gloved hand activation
Touch Point Accuracy	± 2 mm
Response Speed	≤ 15 ms
Activation Force	No minimum touch activation force
Touch Durability	Unlimited
Glass Thickness	3 mm
Connector	A-type USB
Operating System	Windows 7 / Windows 10

Part no. : K55-IR10

**** Dimension will be changed if multi-touch required**

Options — DC Power

		24V	48V	125V
Input rating	Input voltage	24-Volt	48-Volt	110-Volt
	Input range	18 ~ 36V	36 ~ 75V	43 ~ 160V
Input current	No load	100 mA	50 mA	10 mA
	Full load	7386 mA	3611 mA	1540 mA
Output rating	Output voltage	24-Volt	24-Volt	24-Volt
	Output current	6.25A	6.25A	6.25A
Efficiency		88%	90%	89%

Part no. : 24VDC
48VDC
125VDC

K55 Professional and Versatile 55" LED Monitor

Product Specifications

LCD Panel	Standard	Sunlight Readable
Brightness (cd/m²)	450	1500
Contrast ratio (typ.)	1200 : 1	4000 : 1
Panel size (diagonal)	55-inch widescreen TFT color LCD	
Native resolution	3840 x 2160	
Colors	1.07 Billion, 10-bit	
Viewing angle (L/R/U/D)	89/89/89/89	
Response time (ms)	12	
Dot pitch (mm)	0.315	
Display area (mm)	1209.60H x 680.4V	
Surface treatment	Anti-glare	
Surface hardness	2H	
Backlight type	LED	
MTBF (hrs)	30,000	

Video	
Digital :	
Display port	DP 1.2 / HDCP 1.3
HDMI	HDMI 2.0 / HDCP 2.2
	HDMI 1.4 / HDCP 1.4

Audio	
Audio input :	
Connector	3.5mm stereo jack
Impedance / Power level	30kΩ / 750mV
Audio output :	
Connector	3.5mm stereo jack
Resistance / Power level	30kΩ / 2.8V
Speaker :	
Dual stereo speaker	10W x 2

*When the audio output is connected, speaker output is OFF

Power		
Input	Auto-sensing 100 to 240VAC, 50 / 60Hz	
Consumption :		
Screen on	Max. 100W	Max. 335W
Power saving mode	Max. 9W	Max. 9W
Power button on	Max. 2W	Max. 2W

Environment	
Operating temp.	0 to 55°C degree
Storage temp.	-20 to 60°C degree
Operating humidity	20~90%, non-condensing
Storage humidity	5 ~90%, non-condensing
Operating altitude	16,000 ft
Non-operating altitude	40,000 ft
Shock	10G acceleration (11ms duration)
Vibration	10~300Hz 0.5G RMS random vibration

Design	AP-K55	NAP-K55	DP-K55	OP-K55
Protection	8mm front bezel	NEMA 4 / IP65	front cover	open frame
Front panel	Black, RAL 9005			-
Rear casing	Black, RAL 9005			

Mounting	AP-K55 / NAP-K55	DP-K55	OP-K55
VESA mount	600 x 400 mm	600 x 400 mm	600 x 400 mm
Universal mount	-	-	bundled
Overhead tilted wall-mount	option	option	-
Desktop stand	option	option	-
Wall mount	bundled	bundled	-

Physical	AP-K55 / NAP-K55		DP-K55	OP-K55
Product (W x D x H) :				
mm	1295 x 89.3 x 776		1269 x 83.1 x 750	1292 x 81.3 x 773
inch	51 x 3.5 x 30.6		50 x 3.3 x 29.5	50.9 x 3.3 x 30.4
Packing (W x D x H) :				
mm	1455 x 212 x 917		1455 x 212 x 917	1455 x 212 x 917
inch	57.3 x 8.3 x 36.1		57.3 x 8.3 x 36.1	57.3 x 8.3 x 36.1
Net weight	45.2 kg / 99.4 lb	50.2 kg / 110.4 lb	42.7 kg / 93.9 lb	40.2 kg / 88.4 lb
Gross weight	54.3 kg / 119.5 lb	59.3 kg / 130.5 lb	51.8 kg / 114 lb	49.3 kg / 108.5 lb
Chassis color	dark			
Chassis materials	Aluminum			

Compliance	
EMC	FCC & CE certified
Safety	CE / LVD certified
Environment	RoHS2 & REACH compliant

Applicable Format		
Display port input	PC signal	3840 x 2160 x 60Hz 1920 x 1080 x 60Hz 1600 x 1200 x 60Hz 1360 x 768 x 60Hz 1280 x 1024 x 60 / 75Hz 1280 x 768 x 60Hz 1024 x 768 x 60 / 70 / 75Hz 800 x 600 x 60 / 72 / 75Hz 720 x 400 x 70Hz 640 x 480 x 60 / 72 / 75Hz
	Audio signal	2ch Linear PCM
HDMI input	HDMI 2.0	3840 x 2160 x 60 Hz
	HDMI 2.0 / 1.4	3840 x 2160 x 30 Hz 1920 x 1080 x 50 / 60Hz (1080p) 1920 x 1080 x 25 / 30Hz (1080i) 1280 x 720 x 50 / 60Hz (720p) 720 x 480 x 50 / 60Hz (576p / 480p)
	Audio signal	2ch Linear PCM

K55 Professional and Versatile 55" LED Monitor

Diagrams (mm)

Front View

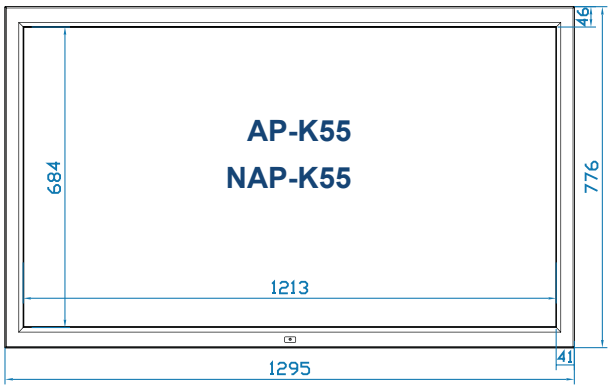

Side View

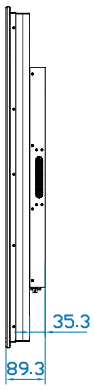

Rear View

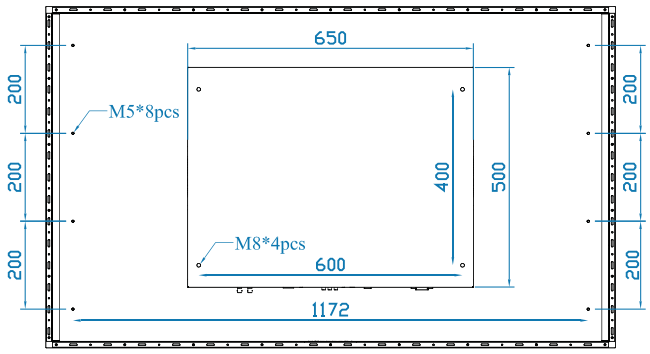

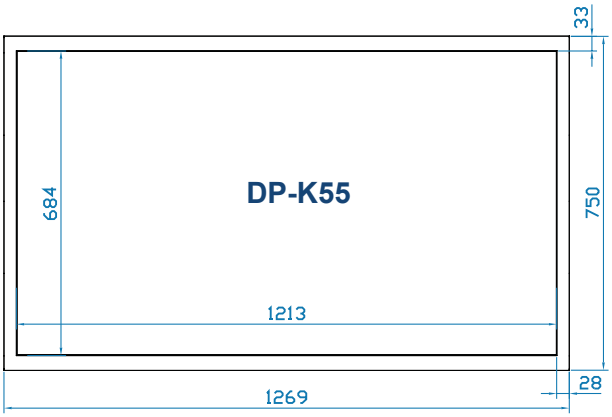

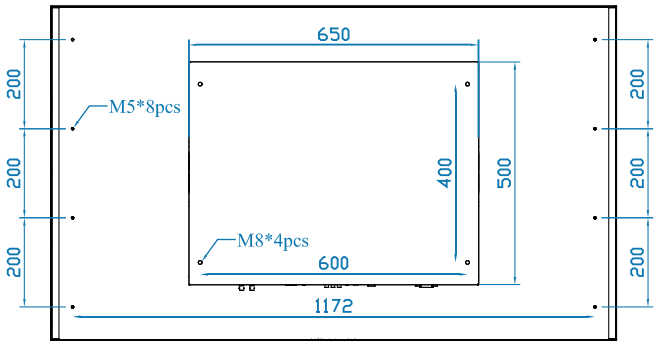

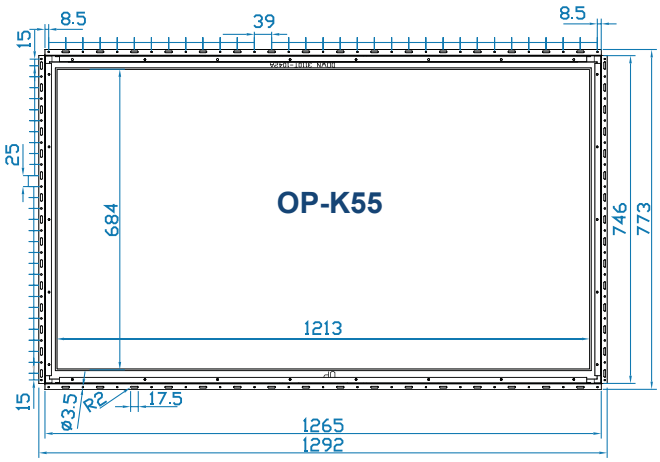

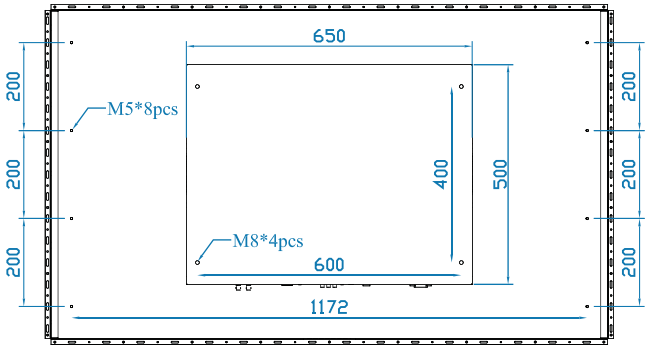

The Industrial series covers a full range of professional LCD display sizes from 6.5" to 65".
Please select from the below the most suitable model for your application.

Sales Inquiry
sales@rackmountsales.com

Technical Support
sales@rackmountsales.com

16 : 9 (4K / 1080p)

- K65"
- K55"
- K43"
- K32"
- K28"
- K23"
- K17"
- K15"

16 : 9 (1080p)

- F21"
- F17"
- F15"

16 : 10

- X24" (1920 x 1200)
- X17" (1920 x 1200)
- W19" (1440 x 900)

4 : 3

- 20" (1600 x 1200)
- 19" (1280 x 1024)
- 17" (1280 x 1024)
- 15" (1024 x 768)
- 12" (800 x 600)
- 10" (800 x 600)
- 8" (800 x 600)
- 6" (640 x 480)

Sunlight Readable

16 : 9 (4K / 1080p)

- K65"
- K55"
- K43"
- K32"

16 : 9 (1080p)

- F21"
- F17"

16 : 10

- W19" (1440 x 900)

4 : 3

- 19" (1280 x 1024)
- 17" (1280 x 1024)