CRYSTAL IMAGE TECHNOLOGIES

1U Dual Slide LCD Keyboard / KVM Drawer

LCD Drawer & KVM Benefits

- **1U dual slide rackmount drawer with 17" LCD**
- **Multi-user Matrix KVM with either 16 or 32 ports in 1U**
- **Cost efficient Combo KVM integration**
- **Mix PS/2, USB & SUN with Multi-Platform switch capability**

Drawer Features & Options

- SUN key support including Stop, Cut, Paste, Compose etc
- Multiple keyboard language selections with touchpad
- Enhanced aesthetics with new molded front panel and two point lock

Sun microsystems · IBM · hp · DELL · Microsoft Windows · Linux

AV — BNC + S-Video

DVI — DVI-D

DC — DC Power

Audio

BNC + S-Video

DC Power

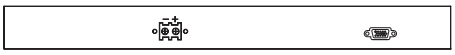

DVI-D

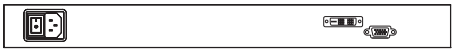

Audio

Diagram

Unit : mm

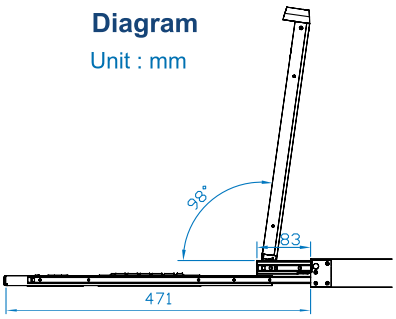

Monitor Grade A 17"industrial TFT LCD panel

Dimensions

Model	Product Dimension (W x D x H)	Packing Dimension (W x D x H)	Net Weight	Gross Weight
17 Series	442 x 650 x 44 mm 17.4 x 25.6 x 1.73 inch	589 x 856 x 168 mm 23.2 x 33.7 x 6.6 inch	16 kg / 35 lbs	22 kg / 48 lbs

Keyboard Selection

Supporting layouts

keyboard integrated with touchpad

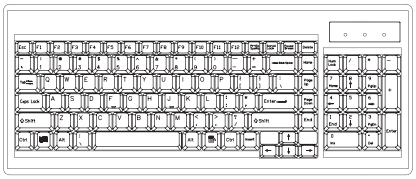

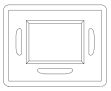

Item	Description				
Form Factor	1U rack mounting on slide-out rails				
LCD Manufacturer	SAMSUNG			-	
Series	R			"S"	
Diagonal Size	15" TFT	17" TFT	19" TFT	17" TFT	19" TFT
Max. Resolution	1024 x 768	1280 x 1024	1280 x 1024	1152 x 900 (Direct) 1280 x 1024 (Native)	1152 x 900 (Direct) 1280 x 1024 (Native)
Brightness (cd/m²)	250	300	300	300	300
Color Support	16.2 M	16.7 M	16.7 M	16.7 M	16.7 M
Contrast Ratio (typ.)	700:1	1000:1	1000:1	1000:1	1000:1
Viewing Angle (H/V)	150˚ x 135˚	160˚ x 160˚	150˚ x 135˚	160˚ x 160˚	160˚ x 160˚
Display Area (mm)	304 x 228	338 x 270	376 x 301	338 x 270	376 x 301
Tr Response Time (ms)	2	1.3	1.3	1.3	1.3
LCD Panel MTBF (hrs)	50,000	50,000	50,000	50,000	50,000
VGA Signal Input	Analog RGB, 0.7Vp-p				
Sync. Type	Separate H/V, Composite, SOG				
Resolution	640 x 400, 70 Hz	-			
	720 x 400, 70 Hz				
	640 x 480, 60/ 70/ 72/ 75 Hz				
	800 x 600, 60/ 70/ 72/ 75 Hz				
	1024 x 768, 60/ 70/ 72/ 75 Hz	1024 x 768, 60/ 70/ 75 Hz			
	-	1152 x 864, 60/ 70/ 75 Hz			
	-	1280 x 720, 60/ 70/ 75 Hz			
	-	1280 x 1024, 60/ 70/ 72/ 75 Hz			
	-			1152 x 900, 66 /76Hz	
Plug & Play DDC	EDID 1.3				
Console Port (Combo)	DB-15 connector for VGA / keyboard / mouse (Combo interface)			DB-15 connector for VGA / keyboard / mouse Support USB servers or Combo KVM switches	
Power Input	Auto-sensing 100 to 240VAC, 50 / 60Hz				
Power Consumption	Max. 48 Watt, Standby 5 Watt				
Compatibility	Multi-platform - Mix PCs, SUNs, IBMs, HPs & DELLs.				
Regulation Approval	FCC, CE				

Options

KVM Integration	Matrix & combo KVM with IP console and 2-console selection	
Keyboard & mouse	Full size keyboard built-in touch-pad / trackball	SUN-compatible keyboard integrated with 3-button touchpad / trackball
Graphic Input	DVI-D, BNC & S-Video input	-
DC Power	DC power input with 12V, 24V, 48V selection	
Touchscreen	Resistive & capacitive	-

Environmental

Operation	0˚ to 50˚C Degree
Storage	-5˚ to 60˚C Degree
Relative Humidity	5~90%, non-condensing
Shock	10G acceleration (11ms duration)
Vibration	5~500Hz 1G RMS random vibration