User Manual 1U 17″ 4K LCD Console Drawer

RM-117K

RM-K17USD

Ultra short depth
400mm / 15.7″

751

Legal Information

First English printing, December 2019

Information in this document has been carefully checked for accuracy; however, no guarantee is given to the correctness of the contents. The information in this document is subject to change without notice. We are not liable for any injury or loss that results from the use of this equipment.

Safety Instructions

Please read all of these instructions carefully before you use the device. Save this manual for future reference.

- Unplug equipment before cleaning. Don't use liquid or spray detergent; use a moist cloth.
- Keep equipment away from excessive humidity and heat. Preferably, keep it in an air-conditioned environment with temperatures not exceeding 40º Celsius (104º Fahrenheit).
- When installing, place the equipment on a sturdy, level surface to prevent it from accidentally falling and causing damage to other equipment or injury to persons nearby.
- When the equipment is in an open position, do not cover, block or in any way obstruct the gap between it and the power supply. Proper air convection is necessary to keep it from overheating.
- Arrange the equipment's power cord in such a way that others won't trip or fall over it.
- If you are using a power cord that didn't ship with the equipment, ensure that it is rated for the voltage and current labeled on the equipment's electrical ratings label. The voltage rating on the cord should be higher than the one listed on the equipment's ratings label.
- Observe all precautions and warnings attached to the equipment.
- If you don't intend on using the equipment for a long time, disconnect it from the power outlet to prevent being damaged by transient over-voltage.
- Keep all liquids away from the equipment to minimize the risk of accidental spillage. Liquid spilled on to the power supply or on other hardware may cause damage, fire or electrical shock.
- Only qualified service personnel should open the chassis. Opening it yourself could damage the equipment and invalidate its warranty.
- If any part of the equipment becomes damaged or stops functioning, have it checked by qualified service personnel.

What the warranty does not cover

- Any product, on which the serial number has been defaced, modified or removed.
- Damage, deterioration or malfunction resulting from:
  - ☐ Accident, misuse, neglect, fire, water, lightning, or other acts of nature, unauthorized product modification, or failure to follow instructions supplied with the product.
  - ☐ Repair or attempted repair by anyone not authorized by us.
  - ☐ Any damage of the product due to shipment.
  - ☐ Removal or installation of the product.
  - ☐ Causes external to the product, such as electric power fluctuation or failure.
  - ☐ Use of supplies or parts not meeting our specifications.
  - ☐ Normal wear and tear.
  - ☐ Any other causes which does not relate to a product defect.
- Removal, installation, and set-up service charges.

Regulatory Notices Federal Communications Commission (FCC)

This equipment has been tested and found to comply with the limits for a Class B digital device, pursuant to Part 15 of the FCC rules. These limits are designed to provide reasonable protection against harmful interference in a residential installation.

Any changes or modifications made to this equipment may void the user's authority to operate this equipment. This equipment generates, uses, and can radiate radio frequency energy and, if not installed and used in accordance with the instructions, may cause harmful interference to radio communications.

However, there is no guarantee that interference will not occur in a particular installation. If this equipment does cause harmful interference to radio or television reception, which can be determined by turning the equipment off and on, the user is encouraged to try to correct the interference by one or more of the following measures:

- Re-position or relocate the receiving antenna.
- Increase the separation between the equipment and receiver.
- Connect the equipment into an outlet on a circuit different from that to which the receiver is connected.

Contents

< Part. 1 > RM-117K / RM-K17USD

1.1 Package Content P.1
1.2 Structure Diagram & Dimension P.1
1.3 Installation P.4
1.4 Connection P.8

< Part. 2 > Specifications / OSD

2.1 Product Specifications P.10
2.2 Keyboard / Mouse Specifications P.12
2.3 On-screen Display Operation (OSD) P.15

< Part. 3 > Option

3.1 3G / HD / SD-SDI Broadcast-grade input P.18
3.2 HDMI 2.0 video input P.19
3.3 K17 Touchscreen : Resistive 1-point touch P.20
3.4 DC Power : 12V / 24V / 48V / 125V P.22
3.5 ORB-2.1:2-post rack mounting brackets(RM-K17USD only) P.23

< Part. 4 > KVM integration

4.1 RM-117K / RM-K17USD P.24

Before Installation

- It is very important to mount the equipment in a suitable cabinet or on a stable surface.
- Make sure the place has a good ventilation, is out of direct sunlight, away from sources of excessive dust, dirt, heat, water, moisture and vibration.

Unpacking

The equipment comes with the standard parts shown in package content. Check and make sure they are included and in good condition. If anything is missing, or damaged, contact the supplier immediately.

How To Clean Your LCD Monitor

Caution :

- To avoid the risk of electric shock, make sure your hands are dry before unplugging your monitor from or plugging your monitor into an electrical outlet.
- When you clean your monitor, do not press down on the LCD screen. Pressing down on the screen can scratch or damage your display. Pressure damage is not covered under warranty.
- Use only cleansers made specifically for cleaning monitors and monitor screens. Cleansers not made to clean monitors and monitor screens can scratch the LCD display or strip off the finish.
- Do not spray any kind of liquid directly onto the screen or case of your monitor. Spraying liquids directly onto the screen or case can cause damage which is not covered under warranty.
- Do not use paper towels or abrasive pads to clean your monitor. Using an abrasive pad or any wood based paper product such as paper towels can scratch your LCD screen.

Cleaning Your Monitor

To clean your LCD safely, please follow these steps :

① Disconnect the power cord.

② Gently wipe the surface using a clean, dry microfiber cloth. Use as little pressure as possible.

Cleaning Tough Marks and Smudges

To remove tough marks and smudges, please follow these steps :

① Disconnect the power cord.

② Spray a small amount of non-abrasive cleanser on a microfiber cloth.

Caution : Do not spray or apply any liquids directly onto the monitor. Always apply the solution to your microfiber cloth first, not directly on the parts you are cleaning.

③ Gently wipe the surface. Use as little pressure as possible.

④ Wait until your monitor is completely dry before plugging it in and powering it up.

< Part 1 >

< 1.1 > Package Content

RM-117K

- USB cable X 2
- Power cord X 1
- M6 screw, cage nut & cup washer X 8

RM-K17USD

- USB cable X 2
- 4A Power adapter & Power cord X 1
- M6 screw, cage nut & cup washer X 8

< 1.2 > Structure Diagram

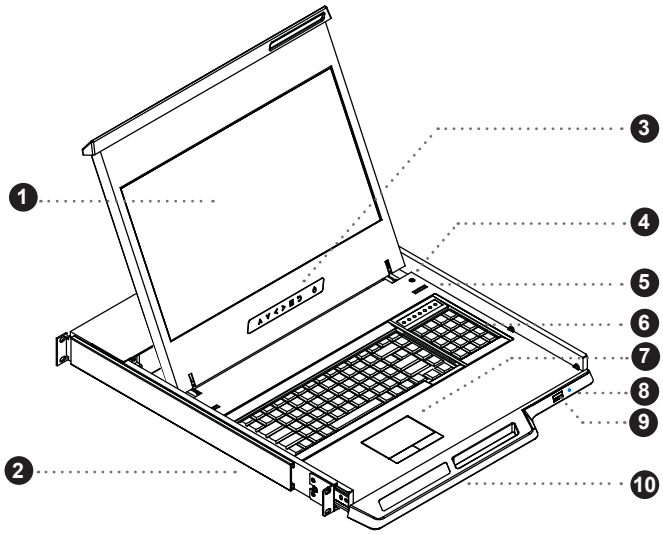

① LCD interchangeable module kit
② Installation Slides
③ LCD membrane
④ Micro switch for screen auto power off
⑤ Audio speaker (for SDI or HDMI option)
⑥ Keyboard interchangeable module kit
⑦ Mouse interchangeable module kit
⑧ Blue Power LED
⑨ Front USB port for device access
(USB Hub KVM only)
⑩ Molded front handle

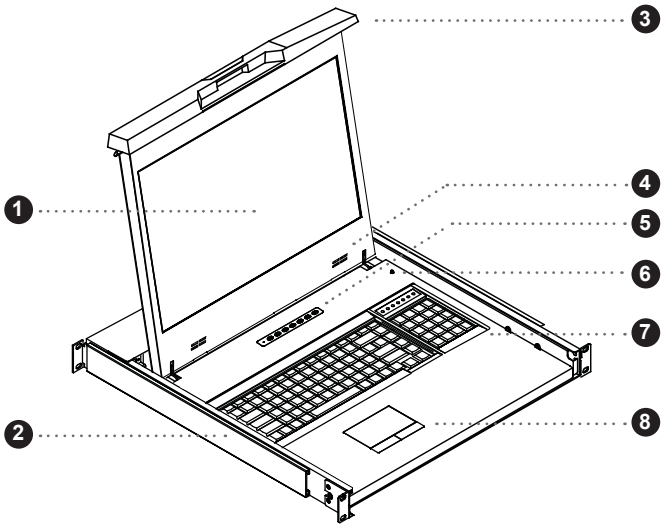

① LCD interchangeable module kit
② Installation Slides
③ Molded front handle
④ Audio speaker (for SDI or HDMI option)
⑤ LCD membrane
⑥ Micro switch for screen auto power off
⑦ Keyboard interchangeable module kit
⑧ Mouse interchangeable module kit

The above package content is only for the single console models.
It varies with options such as SDI, HDMI, Touchscreen & DC power.

< 1.2 > Dimension - RM-117K

Front View

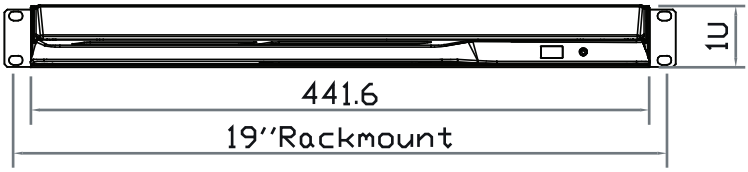

Rear View

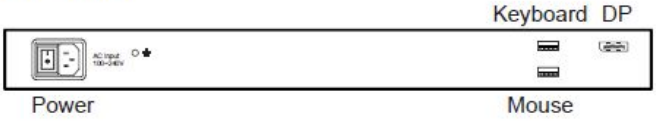

UNIT : mm
1mm = 0.03937 inch

Side View

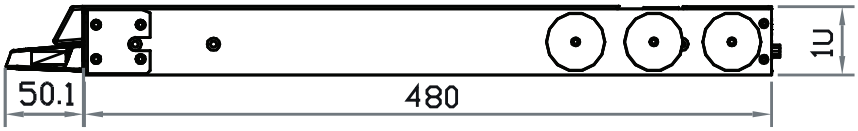

Top View

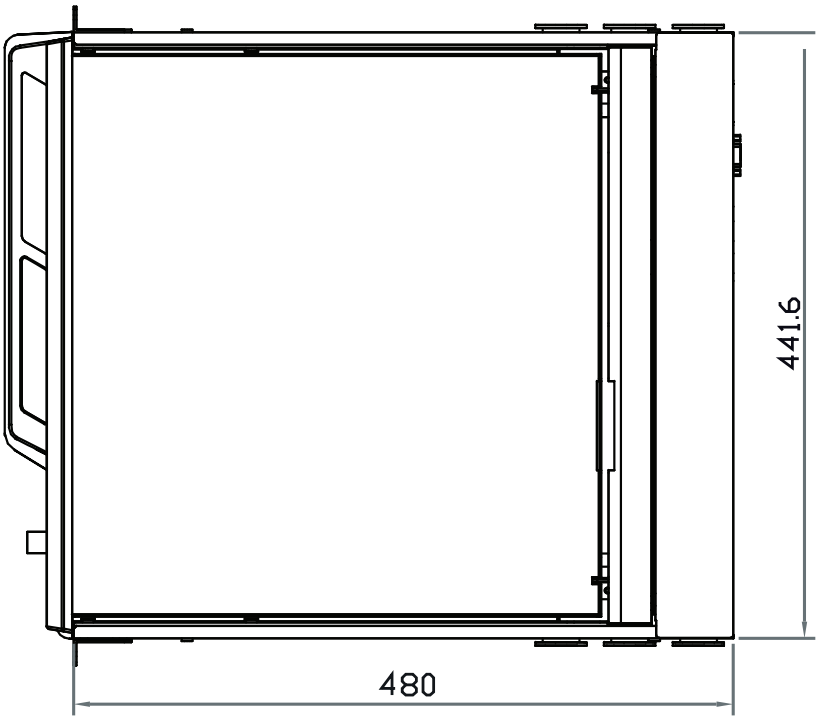

RM-117K

Model	Product Dimension (W x D x H)	Packing Dimension (W x D x H)	Net Weight	Gross Weight
RM-117K	441.6 x 480 x 44 mm 17.4 x 18.9 x 1.73 inch	590 x 808 x 140 mm 23.2 x 31.8 x 5.5 inch	10.9 kg 24 lb	15.8 kg 34.8 lb

The weight is only for the single console models. It varies with accessories & options such as SDI, HDMI, Touchscreen & DC power.

Dimension - RM-K17USD

Front View

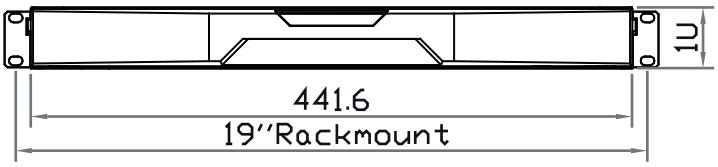

Rear View

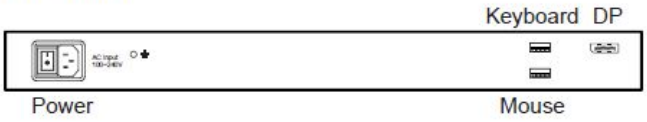

UNIT : mm
1mm = 0.03937 inch

Side View

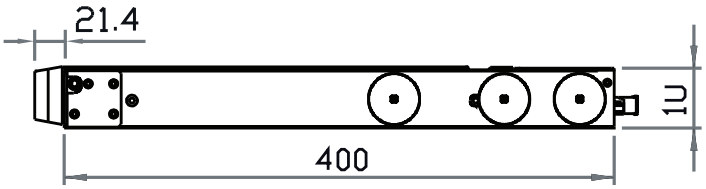

Top View

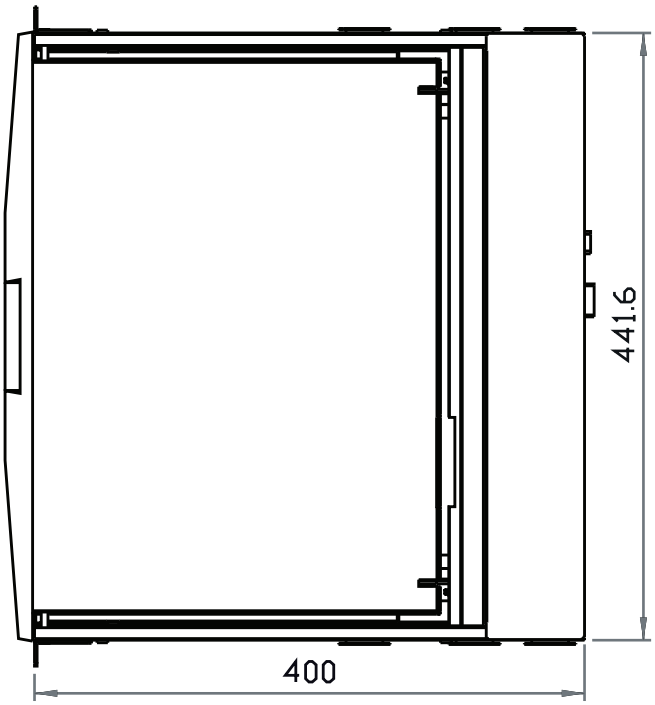

RM-K17USD

Model	Product Dimension (W x D x H)	Packing Dimension (W x D x H)	Net Weight	Gross Weight
RM-K17USD	441.6 x 400 x 44 mm 17.4 x 15.7 x 1.73 inch	590 x 622 x 140 mm 23.2 x 24.5 x 5.5 inch	8.7 kg 19.1 lb	13.7 kg 30.2 lb

The weight is only for the single console models. It varies with accessories & options such as SDI, HDMI & DC power.

Intentionally
Left
Blank

< 1.3 > Installation - Installation Slides

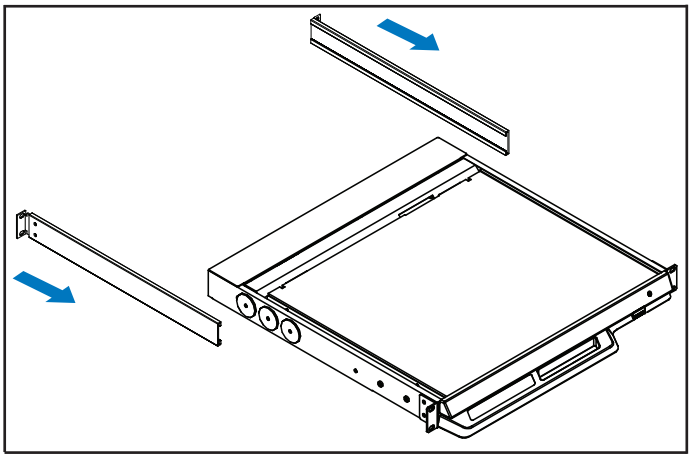

Step 1

- Insert the left and right rear mounting brackets into the LCD console drawer.

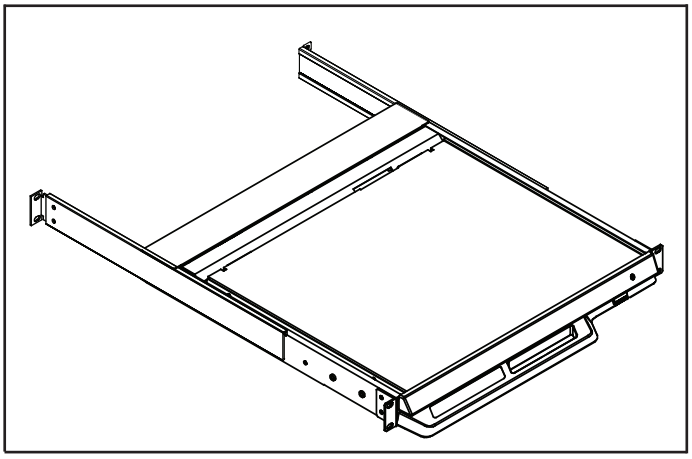

Step 2

- Measure the depth of the front and rear mounting rails.
- Align each rear mounting bracket to a suitable length.

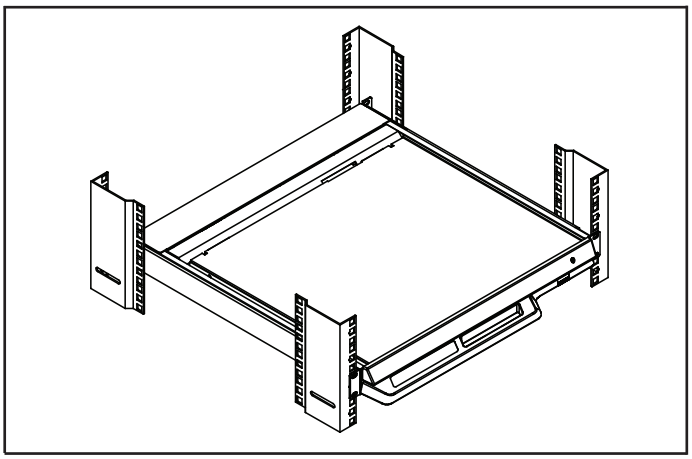

Step 3

Complete the installation

- Fix the LCD console drawer into the rack.

M6 screw, cage nut & cup washer x 8 are provided.

Installation - How to use the RM-117K drawer

- Hold the handle and slide out the drawer.

- Flip up the LCD to a suitable angle.

- Operate the LCD console drawer.

< 1.3 > Installation - How to use the RM-K17USD drawer

■ Press the handle button and gently slide out the drawer.

■ Flip up the LCD to a suitable angle.

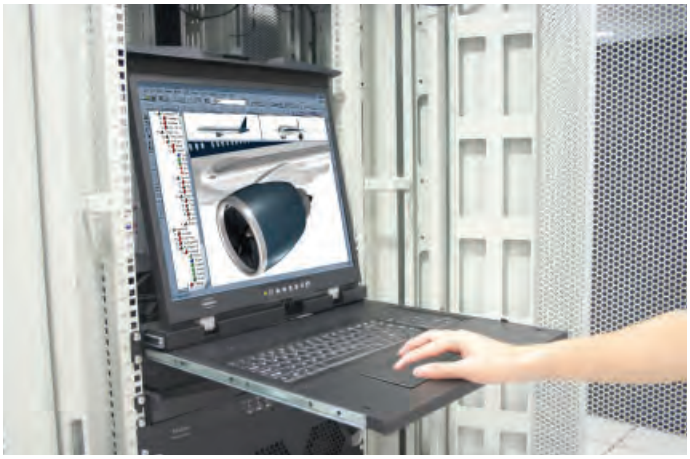

■ Operate the LCD console drawer.

< 1.4 >RM-117K Connection to DP Server

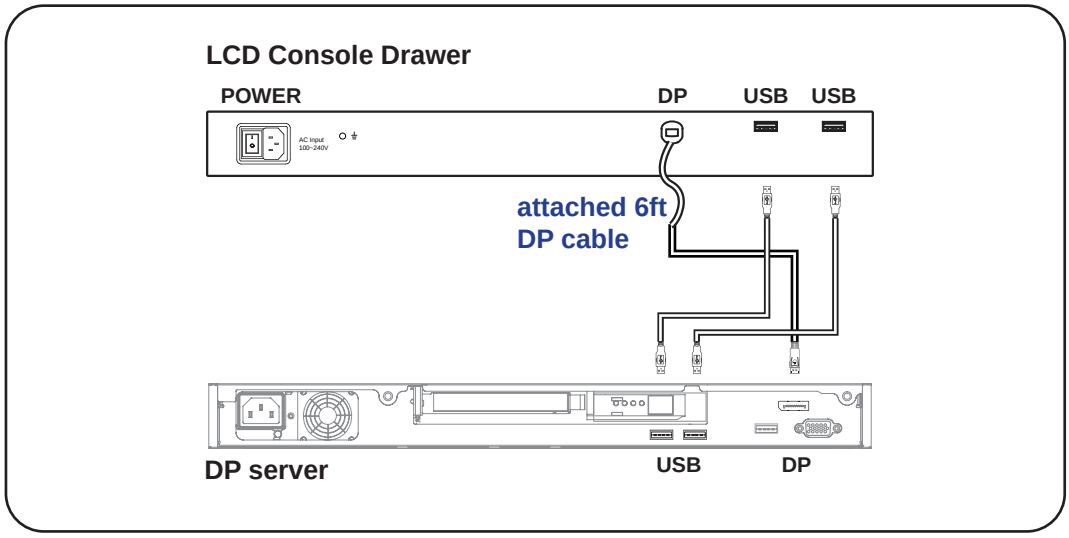

RM-117K Schematic external KVM

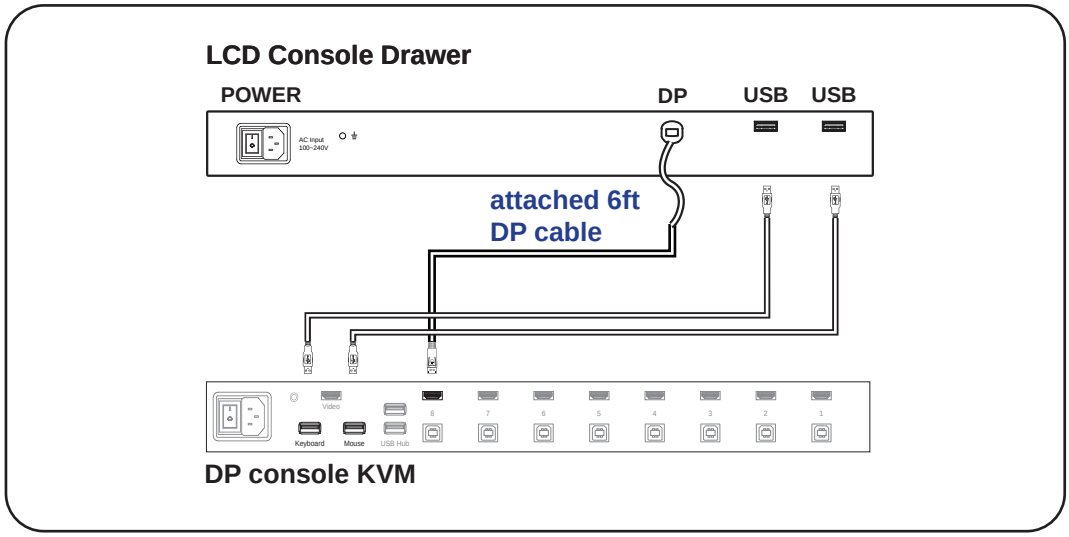

Caution : The LCD console drawer is hot-pluggable, but components of connected devices, such as the servers and KVM switch, may not be hot-pluggable. Plugging and unplugging cables while servers and KVM are powered on may cause irreversible damage to the servers, KVM and LCD console drawer. Before attempting to connect anything to the LCD console drawer, we suggest turning off the power to all devices. Apply power to connected devices again only after the LCD console drawer is receiving power. The company is not responsible for damage caused in this way.

RM-K17USD Connection to DP Server

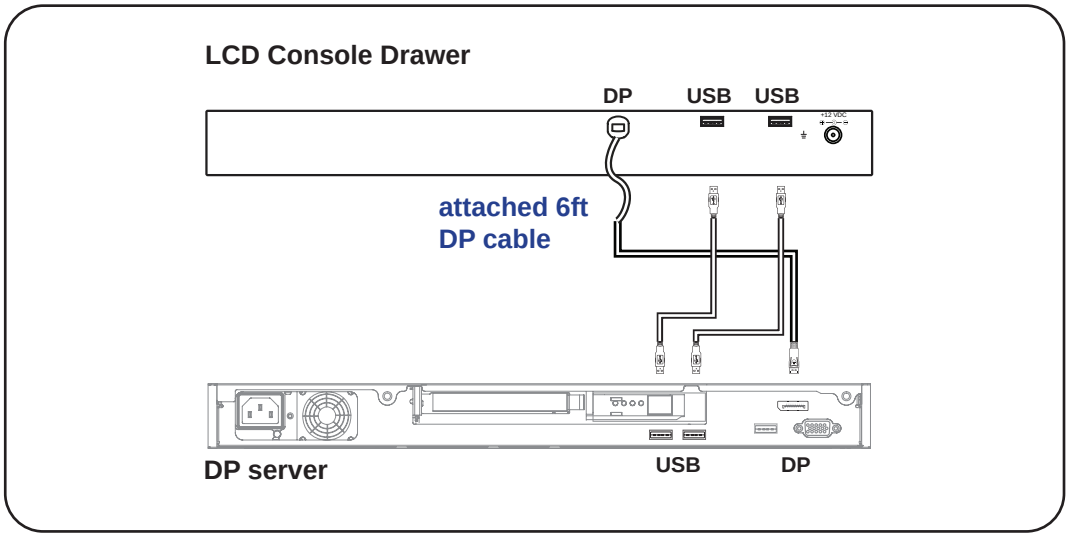

RM-K17USD Connection to external KVM

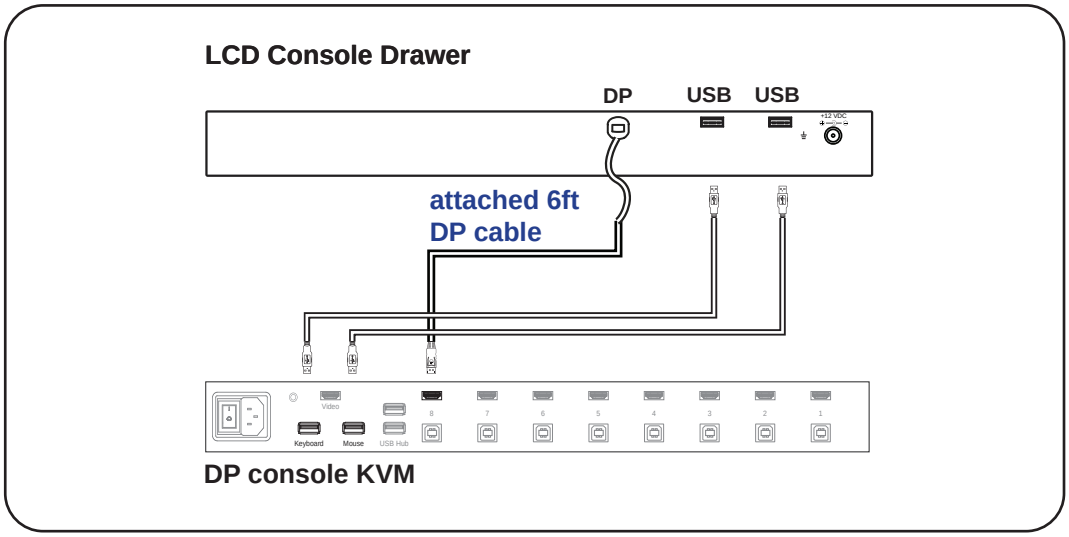

Caution : The LCD console drawer is hot-pluggable, but components of connected devices, such as the servers and KVM switch, may not be hot-pluggable. Plugging and unplugging cables while servers and KVM are powered on may cause irreversible damage to the servers, KVM and LCD console drawer. Before attempting to connect anything to the LCD console drawer, we suggest turning off the power to all devices. Apply power to connected devices again only after the LCD console drawer is receiving power. The company is not responsible for damage caused in this way.

< Part 2 > Specifications / OSD

< 2.1 > Product Specifications

		RM-117K / K17USD
LCD Panel	Native Resolution	3840 x 2160
	Panel Size (diagonal)	17.3-inch TFT color LCD
	Brightness (cd/m²)	300
	Contrast Ratio (typ.)	1000:1
	Colors	16.7 M, 8-bit
	Viewing Angle (L/R/U/D)	89/89/89/89
	Response Time (ms)	16
	Dot pitch (mm)	0.0995
	Display Area (mm)	382.12H x 214.94V
	Surface treatment	Anti-glare
	Surface hardness	3H
	Backlight Type	LED
	MTBF (hrs)	20,000

Video	Package	DP 1.2 / HDCP 1.3
	Option	HDMI 2.0 / HDCP 2.2

Power	Power Supply	Range	Auto-sensing 100 to 240VAC, 50 / 60Hz
	Power Consumption for Single Console	Screen ON	Max. 29W
		Power saving mode	Max. 9W
		Power button OFF	Max. 2W
	Power Consumption with KVM integration	Screen ON	Max. 38W
		Power saving mode	Max. 18W

*** For details, please refer to our KVM rear kit user manuals**

Compliance	EMC	FCC & CE certified
	Safety	CE / LVD certified
	Environment	RoHS2 & REACH compliant

Environmental Conditions	Operating	Temperature	0 to 55°C degree
		Humidity	20~90%, non-condensing
		Altitude	16,000 ft
	Storage / Non-operating	Temperature	-20 to 60°C degree
		Humidity	5~90%, non-condensing
		Altitude	40,000 ft
		Shock	10G acceleration (11ms duration)
		Vibration	5~500Hz 1G RMS random

Physical Specification		RM-117K	RM-K17USD
	Product (W x D x H)	441.6 x 480 x 44 mm 17.4 x 18.9 x 1.73 inch	441.6 x 400 x 44 mm 17.4 x 15.7 x 1.73 inch
	Packing (W x D x H)	590 x 808 x 140 mm 23.2 x 31.8 x 5.5 inch	590 x 622 x 140 mm 23.2 x 24.5 x 5.5 inch
	Net Weight	10.9 kg / 24 lb	8.7 kg / 19.1 lb
	Gross Weight	15.8 kg / 34.8 lb	13.7 kg / 30.2 lb

*** All dimensions stated are subject to change if options are selected / integrated to base model part codes**

Applicable Format			
	Display Port Input	PC Signal	3840 x 2160 x 60Hz
			1920 x 1080 x 60Hz
			1600 x 1200 x 60Hz
			1360 x 768 x 60Hz
			1280 x 1024 x 60 / 75Hz
			1280 x 768 x 60Hz
			1024 x 768 x 60 / 70 / 75Hz
			800 x 600 x 60 / 72 / 75Hz
			720 x 400 x 70Hz
			640 x 480 x 60 / 72 / 75Hz
		Audio Signal	2ch Linear PCM
	HDMI Input	HDMI 2.0	3840 x 2160 x 60Hz
		HDMI 2.0 / 1.4	3840 x 2160 x 30Hz
			1920 x 1080 x 50 / 60Hz (1080p)
			1920 x 1080 x 25 / 30Hz (1080i)
			1280 x 720 x 50 / 60Hz (720p)
			720 x 480 x 50 / 60Hz (576p / 480p)
		Audio Signal	2ch Linear PCM

*** In some circumstances, if the user connects the LCD to PC via HDMI port or video and audio signals, the LCD may display incorrectly on a full screen. If so, please adjust the display card setting on display size to fix the issue.**

< 2.2 > Standard Keyboard / Mouse Specifications

tp tp keyboard integrated with touchpad

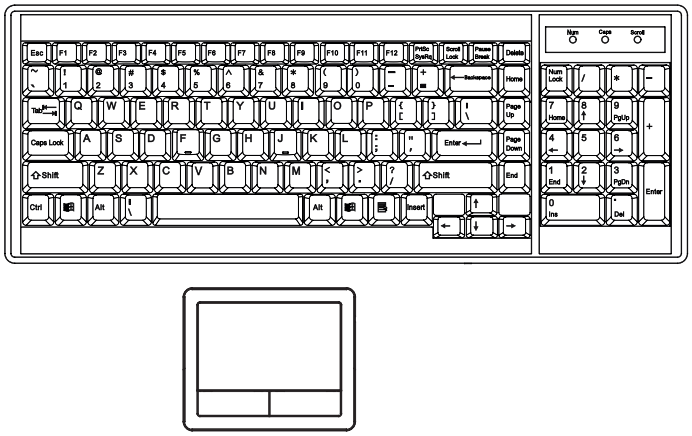

tb tb keyboard integrated with trackball

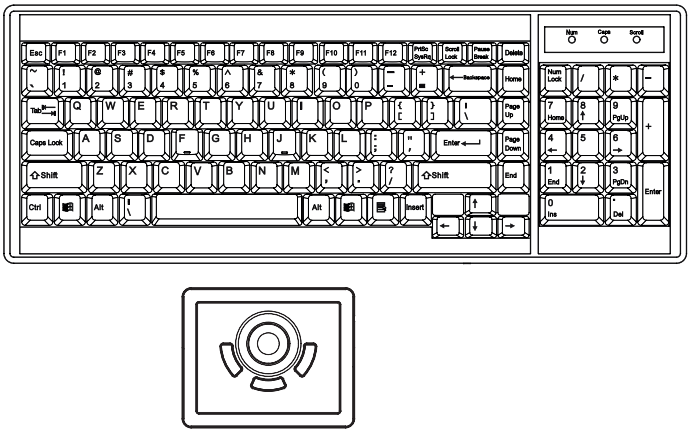

Key force	55 ± 5g
Travelling distance	3 ± 0.3mm
Switch life	> 10 million life cycle time
OS support	Windows / Linux / Unix / Mac OS

Supporting layouts

America	United States				
EMEA	United Kingdom	Germany	France	Spain	Norway
	Italy	Russia	Switzerland	Netherlands	Portugal
Asia	China	Japan	Korea	Arabia	Turkey

MAC Keyboard / Mouse Options

Me MAC keyboard integrated with touchpad

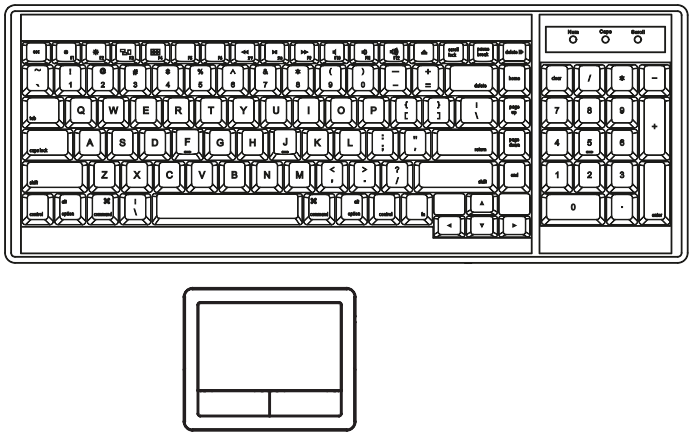

Mb MAC keyboard integrated with trackball

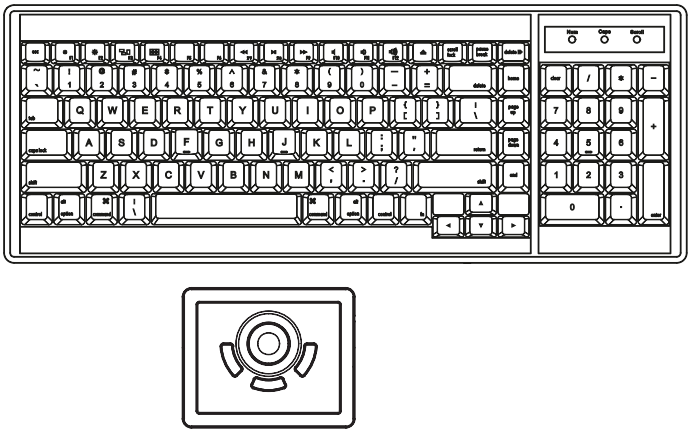

Supporting layouts

America

United States

How to Use "MAC" Keyboard

Keyboard Features

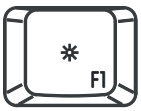

F1
Decrease display brightness

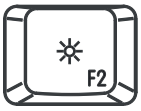

F2
Increase display brightness

F3
Mission control
* Only works with OS X Lion default Keyboard Shortcuts.

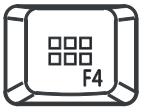

F4
Dashboard

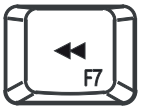

F7
Rewind

F8
Play / Pause

F9
Fast-forward

F10
Mute sound

F11
Decrease volume

F12
Increase volume

Eject disc

Command

< 2.2 > SUN Keyboard / Mouse Options

Se S keyboard integrated with touchpad

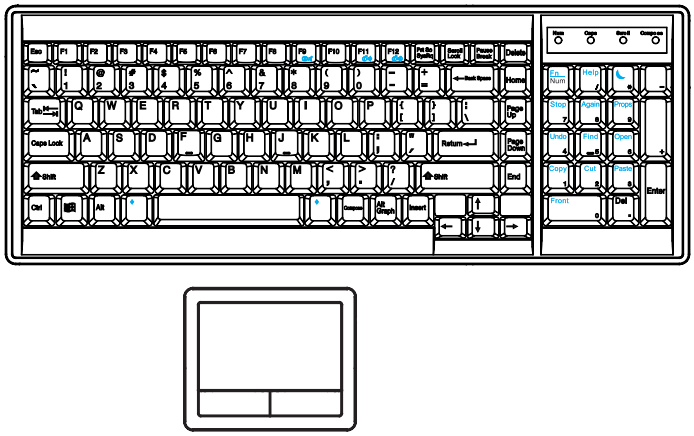

Sb S keyboard integrated with trackball

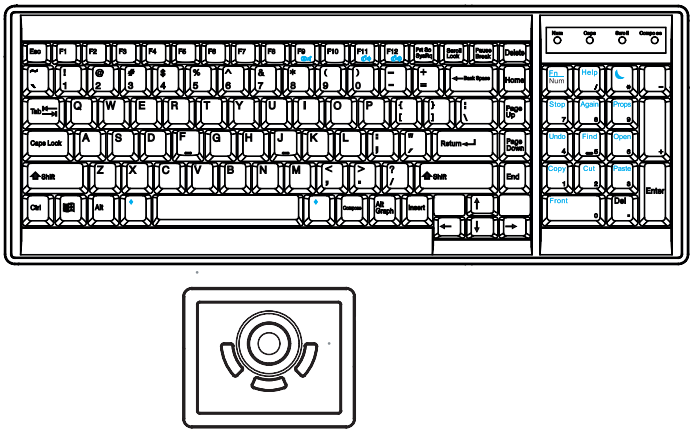

S keyboard integrated with touchpad / trackball

SOLARIS®

- Incorporates SUN keys, including Stop, Cut, Paste, Compose, Copy and Help
- 104 key notepad keyboard with full numerical pad and SUN function
- USB interface
- US layout only

How to Use "S" Keyboard

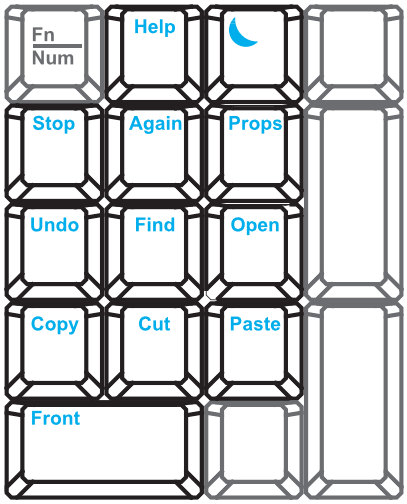

Num LED in Off mode

Key pad behaves as a SUN Solar system administration command mode

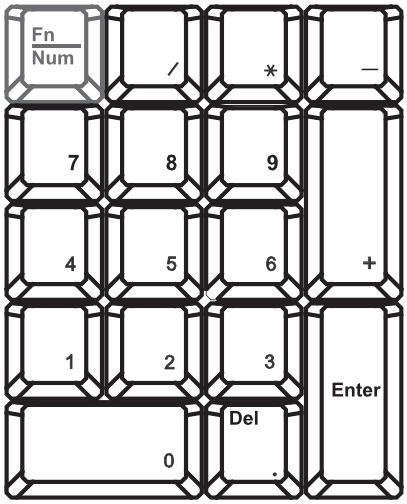

Num LED in Green mode

Key pad behaves as a normal key pad mode

Audio / Display Keys

*** Please ask your supplier for full details**

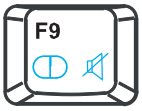

F9
Audio : Mute
Display : Degauss

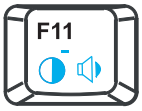

F11
Audio : Decrease volume
Display : Decrease contrast

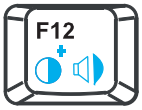

F12
Audio : Increase volume
Display : Increase contrast

< 2.3 > On-screen Display Operation (OSD)

RM-117K

Membrane Switch	Function
⏻	Turn the monitor on or off
☰	Display the OSD menu Act as an Enter key to select screen setting options
∧ ∨ < >	Scroll through menu options and adjust the displayed control
↩	Exit the OSD screen Go back to the previous on-screen sub-menu or main menu

Remark : All LED touch buttons in **WHITE** light.
The LED of **Power** ⏻ touch button will flash continuously when there is no signal input.

① All the LED touch buttons will automatically turn off after 10 minutes of idle status (except the **Power** ⏻).

② Light up all membrane buttons, please press any button for 1 - 2 seconds (except the **Power** ⏻).

RM-K17USD

- ○ Power light
- ● Green = On
- ● Orange = Power saving

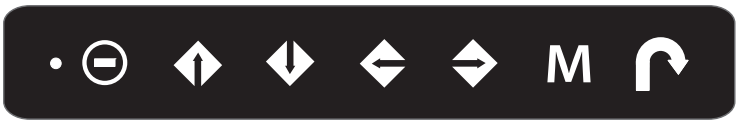

Membrane Switch	Function
⊖	Power on / off LCD
M	Display the OSD menu
⇧ ⇩ ⇦ ⇨	Scrolls through menu options and adjusts the displayed control (To auto adjustment by pressing the button ⇧ for 5 seconds)
↱	Exit the OSD screen Toggle analog, digital & video connection (DVI-D and video options only)

< 2.3 > On-screen Display Operation (OSD)

① Picture

Brightness : Adjust the screen brightness

Contrast : Adjust the difference between the image background (black level) and the foreground (white level)

Black level : Adjust background black level of the screen

Eco : Screen in power saving mode

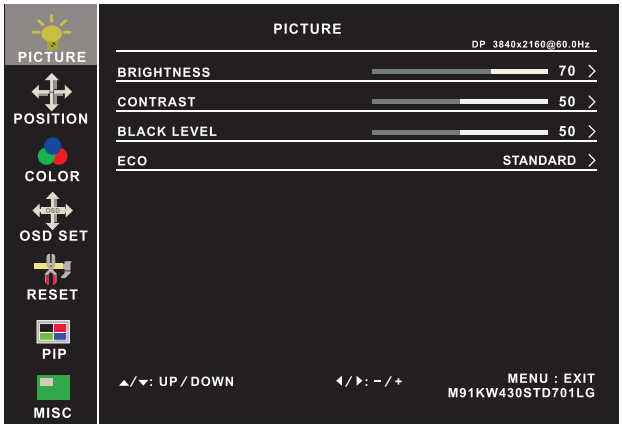

② Position

Picture size : Adjust the image size
- Full Screen / 4:3 / 5:4 / Pixel to Pixel

DP version : Select the DP version

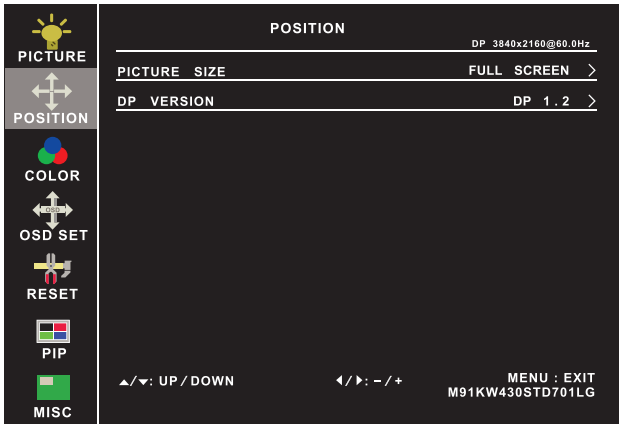

③ Color

Color temperature : User / Warm / Cool / 5400k mode and Red / Green / Blue color balance

Sharpness : Adjust the image from weak to sharp

Hue : Adjust the screen hue value

Saturation : Adjust the saturation of the image color

Dynamic luminous control : Control the dynamic brightness

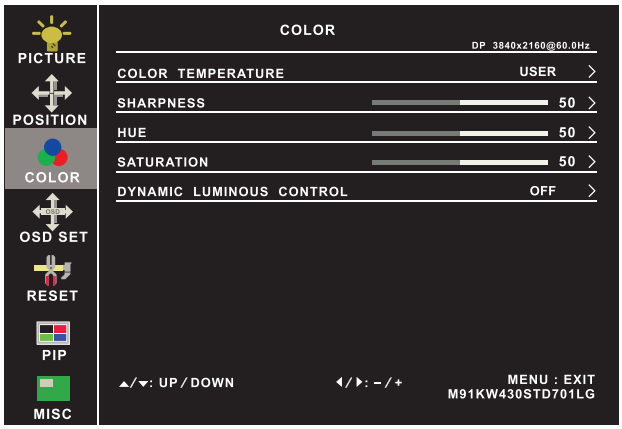

④ OSD Set

Language : Select the language in which the OSD menu is displayed - English

OSD H-Position : Align the screen image left or right

OSD V-Position : Align the screen image up or down

OSD time out : Adjust the screen timeout

OSD transparency : Adjust the screen transparency

OSD size : Adjust the screen size - Normal / Small

OSD rotation : Rotate the screen - 90° / 180° / 270°

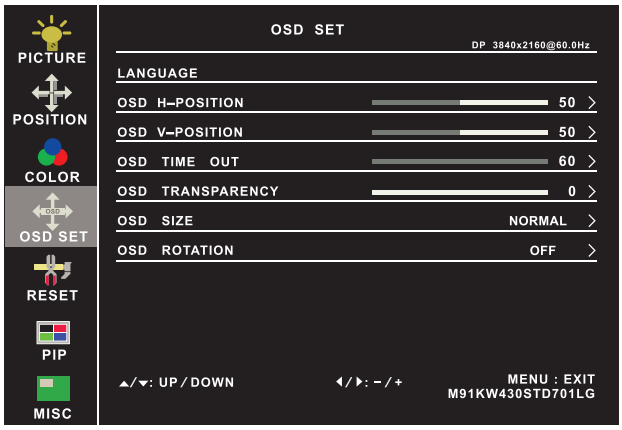

On-screen Display Operation (OSD)

⑤ Reset

Reset : Return the adjustment back to factory setting

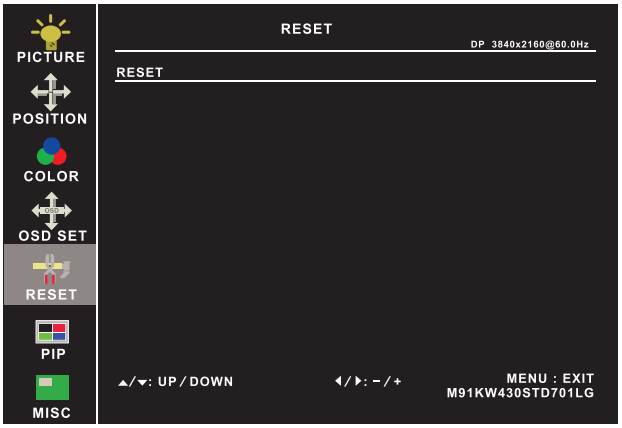

⑥ PIP

PIP mode : Enter into PIP / PBP setting - PIP MODE /
PBP 2WIN (Main screen + 1 sub screen) /
PBP 3WIN (Main screen + 2 sub screen) /
PBP 4WIN (Main screen + 3 sub screen)
Select the signal input of each sub screen

PIP size : Adjust the size of the Sub screen
- Small / Medium / Large / Huge

PIP position : Adjust the position of the Sub screen
- Top Left / Top Right / Bottom Left / Bottom Right

Swap : Swap the input signal of PIP / PBP sub screen

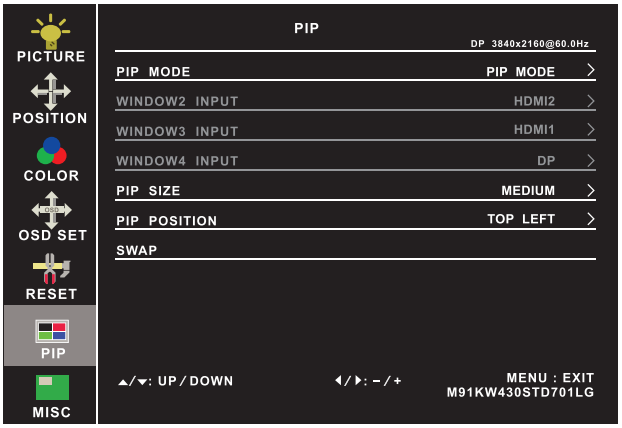

⑦ MISC

Signal source : Select the signal source - DP / HDMI1 / HDMI2

Mute : Turn off the surrounding sound

Audio in : Auto / Line in / DP

Volume : Adjust the volume of sound

Sleep mode : Set the off time - 10 min / 20 min / 30 min /
50 min / 60 min / 120 min / 240 min

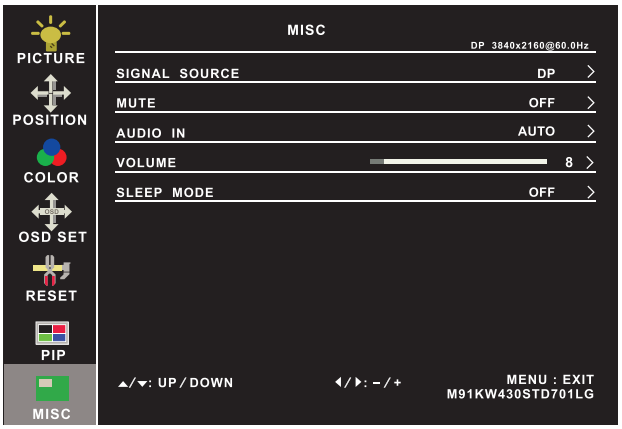

Options on Reset page

Rotation : Rotate the image in Full screen or 1:1
- 90° / 180° / 270°

Picture size : Adjust the image size in Full screen or 1:1

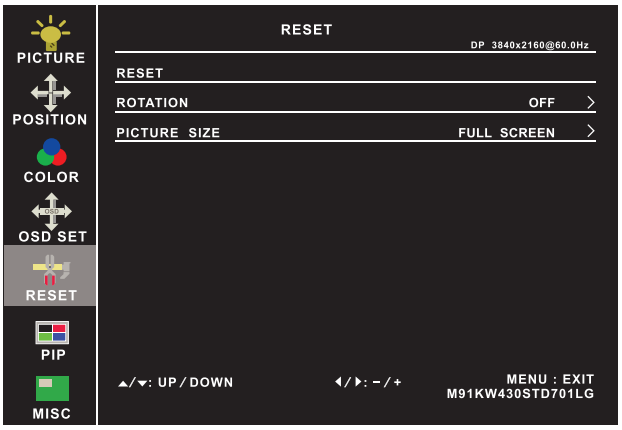

< Part 3 > Option

< 3.1 > 3G / HD / SD-SDI input

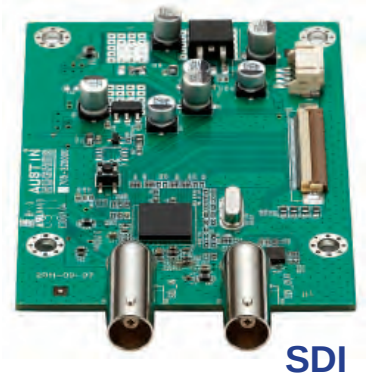

Crystal Image SDI input is an ideal solution for the broadcast-grade video and high resolution CCTV market.

Designed for use with CIT's displays, a SDI input module can support up to 1080p @60Hz resolution without using additional space or power and it comes standard with a 2-year warranty.

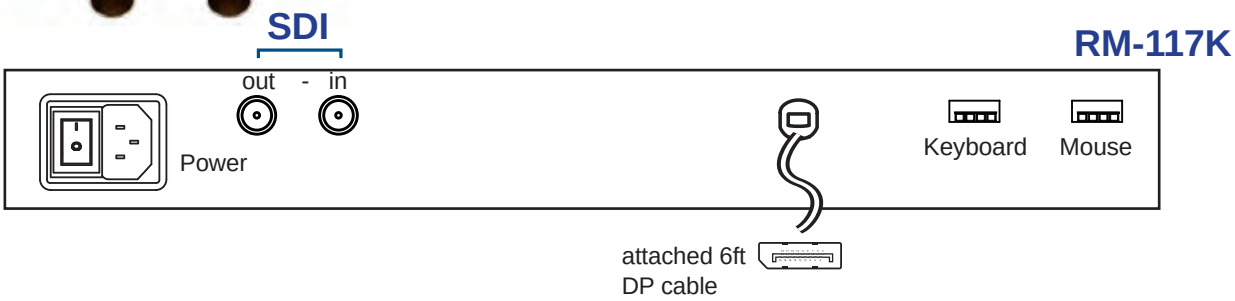

*** **Casing depth will be changed from 480mm (18.9") to 530mm (20.9")**

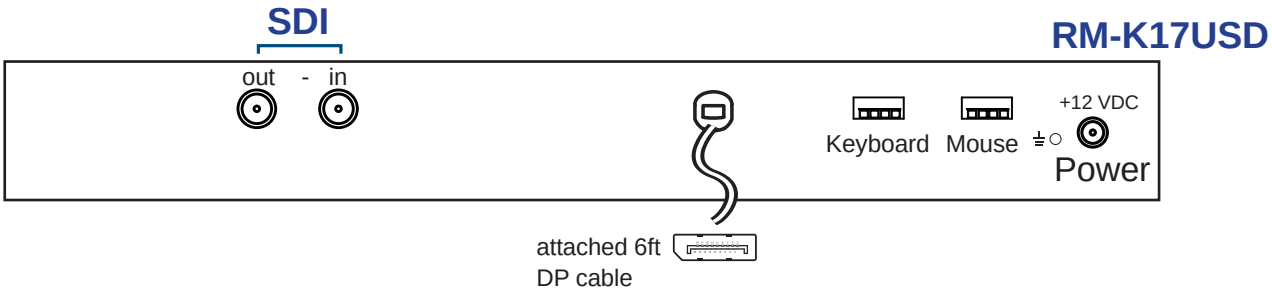

INPUT	3G-SDI IN	BNC x 1 / 0.8Vp-p (75 ohm)
	3G-SDI OUT	BNC x 1 / Active through, equalized & relocked

Standard Compliance	Video	SMPTE 425M / 274M / 296M / 125M ITU-R BT.656
	Audio	SMPTE 299M / 272M-C

Compatible Video Format	3G-SDI	1080p 1080p 1080i 720p	@60 / 50Hz, 4:2:2 @30 / 25 / 24Hz, 4:4:4 @60 / 50Hz, 4:4:4 @60 / 50Hz, 4:4:4
	HD-SDI	1080p 1080i 720p	@30 / 25 / 24Hz, 4:2:2 @60 / 50Hz, 4:2:2 @60 / 50Hz, 4:2:2
	SD-SDI	480i	@60Hz, 4:2:2
	ITU-R BT.656	576i	@50Hz, 4:2:2

Compatible Audio Format	3G-SDI	48kHz, 16 / 20 / 24 bit, 2 CH, Synchronized Video
	HD-SDI	48kHz, 16 / 20 / 24 bit, 2 CH, Synchronized Video
	SD-SDI	48kHz, 16 / 20 / 24 bit, 2 CH, Synchronized / Asynchronized Video

Max. Transmission Distance 75 ohm coaxial cable	3G-SDI	150m at 2.97Gb/s
	HD-SDI	250m at 1.485Gb/s
	SD-SDI	480m at 270Mb/s

< 3.2 > Options : HDMI

- HDMI 2.0 (HDCP 2.2)

(1) In some circumstances, if the user connects the LCD to PC via HDMI port for video and audio signals, the LCD may display incorrectly on a full screen. If so, please adjust the display card setting on display size to fix the issue.

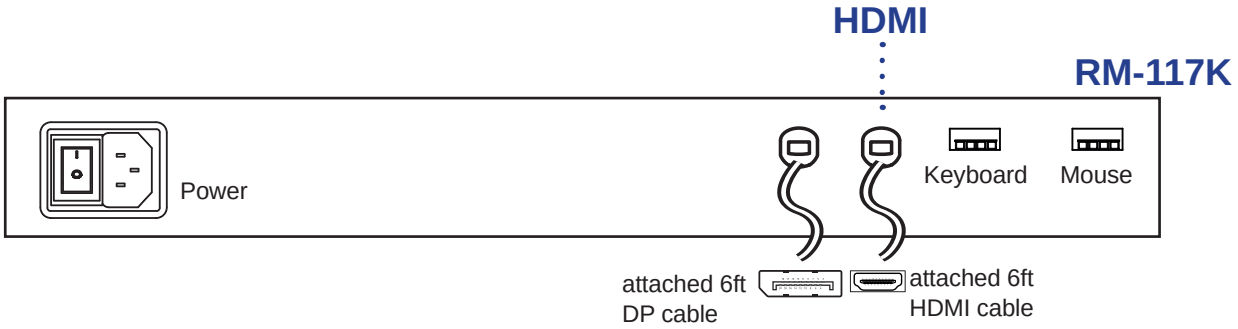

*** **Casing depth will be changed from 480mm (18.9″) to 530mm (20.9″)**

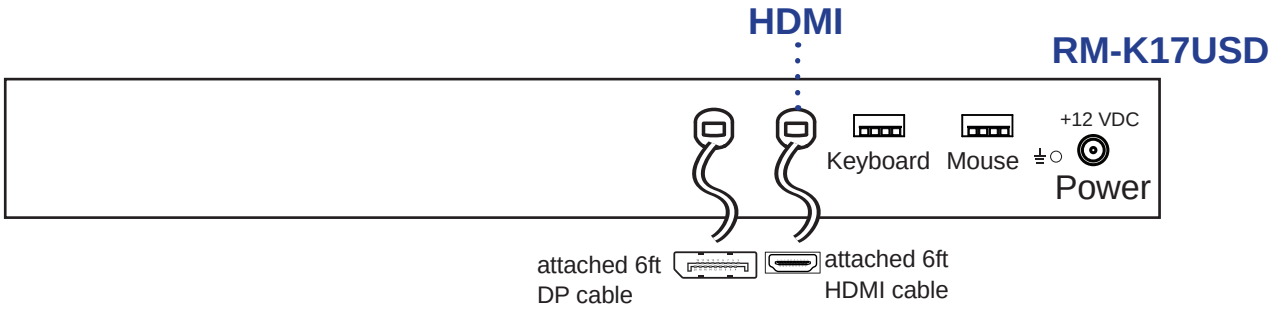

< 3.3 > Options : Touchscreen & driver

K17" USB Touchscreen Specification

Model	**TRB** e-Resistive
Technology	5-Wire Resistive
Touch Point	Single
Input Type	Finger or Stylus
Resolution	2048 x 2048
Response Speed	15 ms
Activation Force	≤ 50 g
Surface Hardness	3H
Light Transmission	80% ± 3%
Haze	8% ± 3%
Durability	10 million touches
Top Layer	ITO Film
Bottom Layer	ITO Glass
Thickness	2.2 ± 0.2 mm
Connector	USB Type A
Compatibility	Windows 7 / XP / Vista, Linux

- USB touchscreen package includes 1 x 6ft USB cable, quick reference guideline and CD disc
- For detailed information, please refer to the attached CD disc
- As the touchscreen unit is not made of toughened glass, please handle it carefully

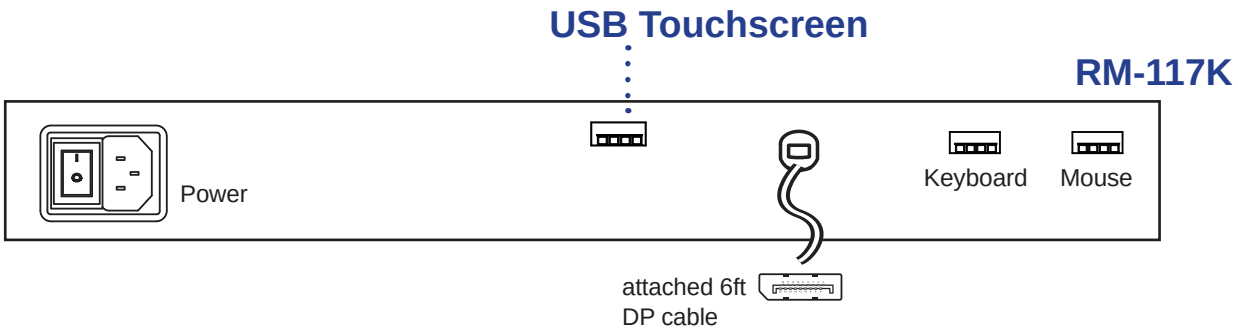

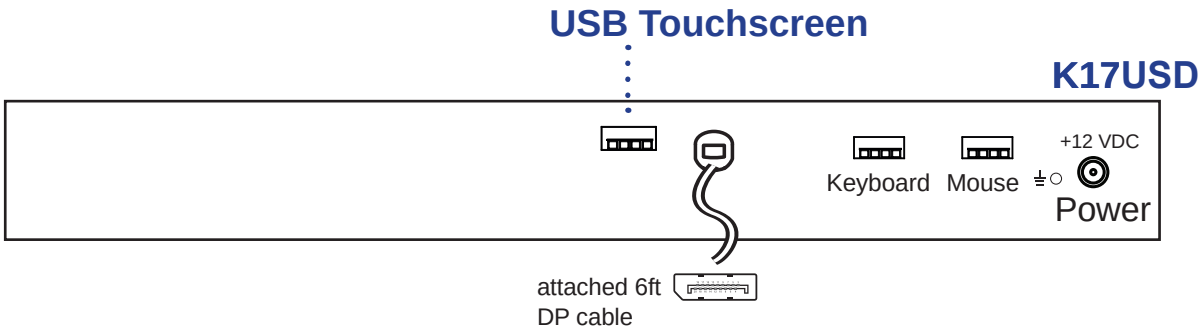

Options : Touchscreen & driver

TRB Driver

Please follow the below steps to setup the touch screen:-

Step 1. Run the bundled CD disc or download the driver from the link below :
http://www.eeti.com.tw/DriverDownload.html

Step 2. Double click the Setup.exe

Step 3. Follow the installation instruction to finish the setup

Step 4. After installation, run the TouchKit program & the “4 point calibration”

Please do the initial calibration after the first setup

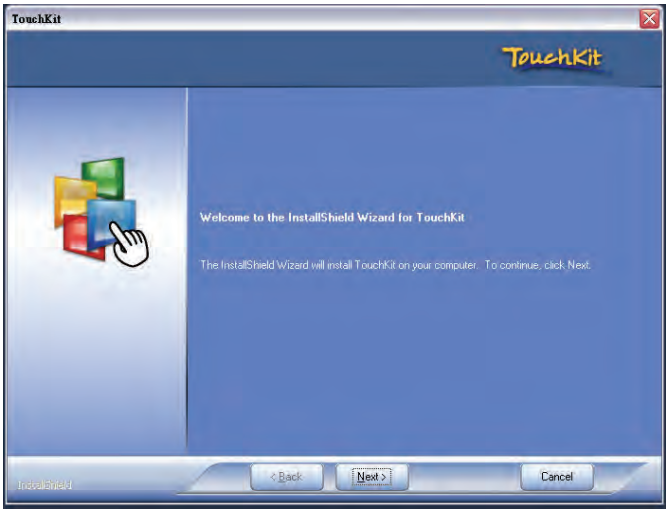

< 3.4 > Options : DC Power

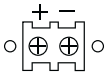

Model	12V	24V	48V	125V
Input rating				
Input voltage:	12-Volt	24-Volt	48-Volt	110-Volt
Input range:	9 ~ 18V	18 ~ 36V	36 ~ 75V	66 ~ 160V
Input current				
- No load	50 mA	50 mA	50 mA	35 mA
- Full load	4950 mA	2450 mA	1220 mA	460 mA
Output rating				
Output voltage:	12-Volt	12-Volt	12-Volt	12-Volt
Output current:	4.16A	4.16A	4.16A	4.16A
Efficiency	84%	88%	90%	89%

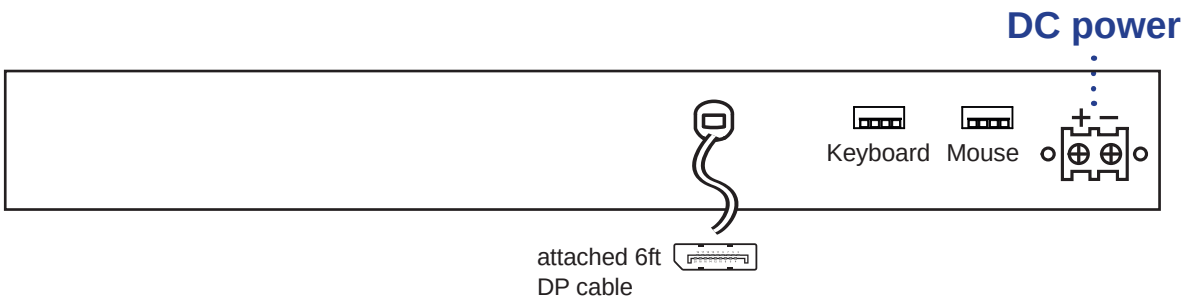

***** For DC power option :**

(1) If the unit with LCD, earthing may be required

(2) DC option excludes AC power adapter and power cord.

(3) K117 casing depth will be extended from 480mm (18.9″) to 530mm (20.9″)

< 3.5 > K17USD Option: ORB-2.1 2-Post Rack Mounting Brackets

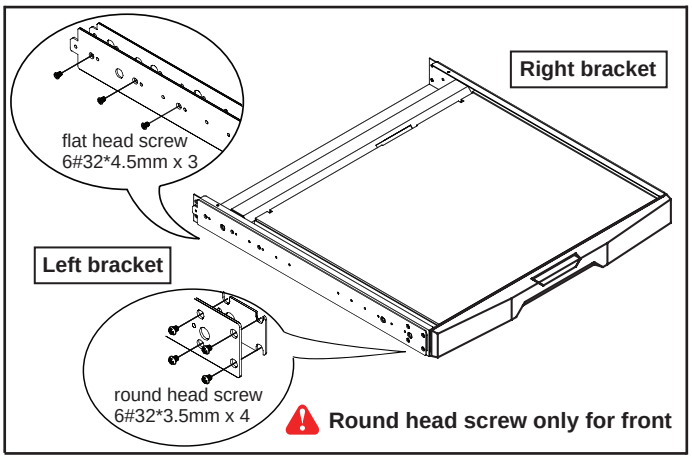

Step 1

- Before apply 2-post rack brackets, please release front mounting ears and rear mounting wheels.
- Attach left and right mounting brackets to the drawer with the screws below :

  6#32*3.5 mm screw x 8 (only for front)
  6#32*4.5 mm screw x 6 (only for rear)

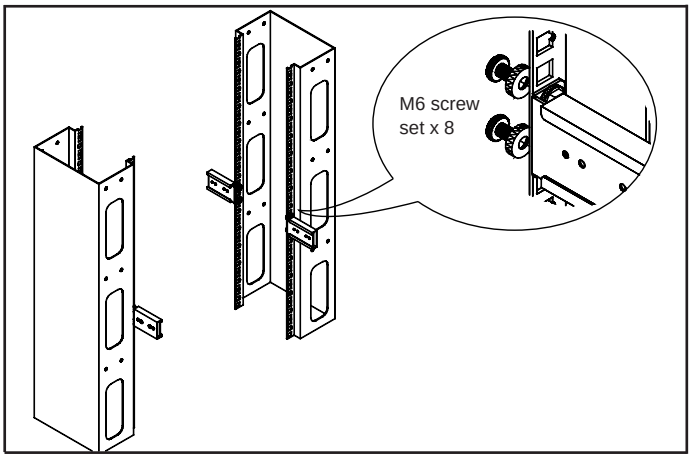

Step 2

- Attach the set of 4 mini brackets to the 2-post rack.
- M6 screw set is not provided.

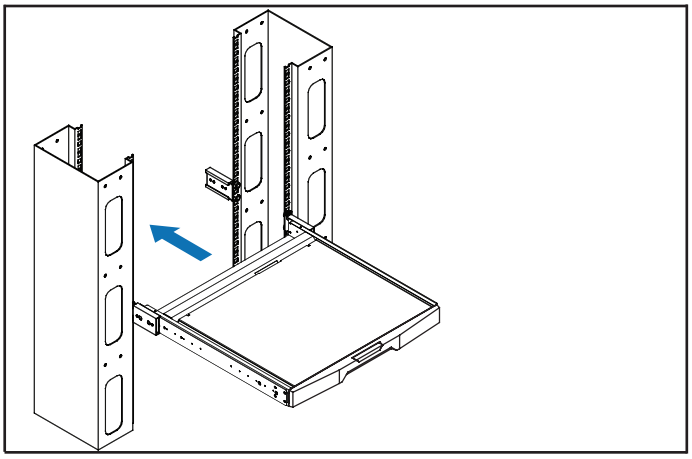

Step 3

- Insert the drawer into the mini brackets.

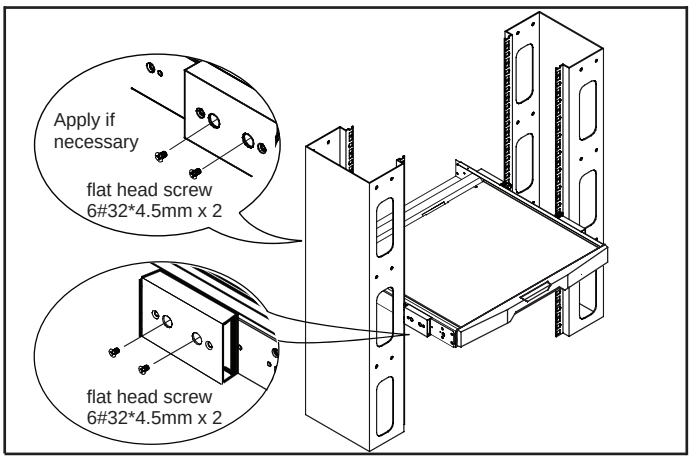

Step 4

- Fix the LCD console drawer to the mini brackets with 6#32*4.5 mm screw x 8.
- Installation completed

This step is necessary for front.
Failure to complete this will cause damage.

< Part 4 > KVM integration

< 4.1 > RM-117K / RM-K17USD

4K 60Hz KVM	IP	Remote	8-port
	0	0	RM-117K - 801K

Model	Product Dimension (W x D x H)	Packing Dimension (W x D x H)	Net Weight	Gross Weight
RM-117K w/KVM	441.6 x 580 x 44 mm 17.4 x 22.8 x 1.73 inch	590 x 808 x 140 mm 23.2 x 31.8 x 5.5 inch	12.1 kg 26.6 lb	18.1 kg 39.8 lb

4K 60Hz KVM	IP	Remote	8-port
	0	0	RM-K17USD - 801K

Model	Product Dimension (W x D x H)	Packing Dimension (W x D x H)	Net Weight	Gross Weight
RM-K17USD/ KVM	441.6 x 580 x 44 mm 17.4 x 22.8 x 1.73 inch	590 x 622 x 140 mm 23.2 x 24.5 x 5.5 inch	9.5 kg 20.9 lb	15.4 kg 33.9 lb

The company reserves the right to modify product specifications without prior notice and assumes no responsibility for any error which may appear in this publication.

All brand names, logo and registered trademarks are properties of their respective owners.